Honeywell

Actuator assembly for HON 5020 Gas pressure regulator

Component documentation,
Maintenance manual and spare parts

Contents

1	**General considerations**	**3**
1.1	About this component documentation	3
1.2	About the safety notices	4
2	**Description**	**6**
2.1	Intended use	6
2.2	Labels/Markings	7
2.3	Identifying the actuator assembly	8
2.4	Layout and operation	9
2.5	Technical specifications	11
3	**Safety**	**15**
3.1	Basic safety rules	15
3.2	Requirements concerning the workforce, personal protective gear, workplaces	16
4	**Transport and installation**	**19**
4.1	Transporting the actuator assembly	19
4.2	Mounting the actuator assembly	21
4.3	Checking the system for leaks	22
5	**Maintenance**	**24**
5.1	Maintenance schedule	24
5.2	Preparing the tools, spare parts and lubricants	24
5.3	Preparing for the maintenance	25
5.4	Maintaining the actuator assembly	26
6	**Storage, removal, and disposal**	**29**
6.1	Storing the device	29
6.2	Disassembling the device	29
6.3	Disposing of the device	31
7	**Appendix**	**32**
7.1	Spare parts for the HON 5020 actuator assembly	32
7.2	Spare parts for travel indication option	36
7.3	Lubricants	36

1 General considerations

Contents

Topic	Page
About this component documentation	3
About the safety notices	4

1.1 About this component documentation

Validity and purpose

This component documentation applies to the actuator assembly for HON 5020 gas pressure regulators.

This component documentation provides all individuals with the information required in order to safely handle the device in connection with the following tasks:

- Transport
- Installation
- Maintenance
- Removal, storage, and disposal

Target group

This component documentation is intended for everyone working with or on the product:

- Transportation personnel
- Installation personnel
- Maintenance and service personnel

Illustration

Honeywell offers products with identical functions in a number of different sizes. For this reason, we are unable to guarantee that the illustrations in this documentation will match the dimensions of your product. In these cases, the illustrations should be viewed as a concept sketch.

Safety

Failing to observe the information provided in this document may lead to injuries, including death and material damages.

To ensure the safety, any persons handling the product must have read and understood the following parts of this document before they start with any work involving it:

- the chapter entitled Safety
- the chapters that describe the work to be done

Copyright notice

Copyright

Honeywell Process Solutions
Honeywell Gas Technologies GmbH
Osterholzstraße 45
34123 Kassel
GERMANY

Tel: +49 561 5007-0
Phone number for service: +49 561 5007-180
Fax: +49 561 5007-107
Fax number for service: +49 561 5007-108
E-mail: gas-ks@honeywell.com
Website:
www.honeywellprocess.com
www.hongastec.de
Printed in Germany

Details about the manufacturer's liability

The manufacturer will not be liable for damages and malfunctions arising from failure to observe this component documentation and other applicable documents.

Constructive changes

Changes and additions to the product must be approved by Honeywell Process Solutions in writing. Any violation will void the legal liability for consequences arising thereof.

1.2 About the safety notices

Meaning

The information contained in the safety notices is intended to prevent personal injury. Safety notices contain the following information:

- Nature and source of the danger
- Possible consequences associated with the non-observance of the notice
- Procedures for the prevention of personal injury

Types of safety notices

This document contains the following types of safety notices:

Type of safety notice	Description	Sign
Basic safety notices	Superordinate safety notices not relating to a specific task: ▪ They contain a summarized description of hazards, risks and safety procedures associated with the handling of the device. ▪ Their purpose is to inform and educate the user about an existing danger and about practicing behavioral safety. ▪ They are suitable as safety instruction for all employees handling the device.	Recognizable by the heading of the chapter
Instruction-related safety notices	Safety notices containing specific instructions relating to the entire manual or a group of manuals	⚠DANGER ⚠WARNING ⚠CAUTION
Step-related safety notices	Safety notices containing specific instructions relating only to the step	**DANGER** **WARNING** **CAUTION**

Type of safety notice	Description	Sign
Additional safety notice	Instruction to observe certain safety notices with reference to a location in the document where safety notices containing specific information about dangers, risks and specific instructions for safety procedures can be found	⚠

Danger levels

The safety notices containing specific instructions are identified with a signal word. The signal word represents a certain danger level:

Danger level	If you fail to follow the instruction, then …	And the consequence is …
DANGER	an accident will happen	serious bodily injury or death.
WARNING	an accident may happen	possible serious bodily injury or death.
CAUTION	an accident may or will happen.	minor or moderate bodily injury.

Warnings about material damages

Warnings about possible material damages are identified with the word **Attention** in this document.

2 Description

Contents

Topic	Page
Intended use	6
Labels/Markings	7
Identifying the actuator assembly	8
Layout and operation	9
Technical specifications	11

2.1 Intended use

Intended use

The HON 5020 actuator assembly must be used exclusively with a compatible pilot made by Honeywell. It is intended to be used, in combination with an appropriate pilot, as a gas pressure regulator in a regulating line. Depending on the pilot model used in combination with the actuator assembly, the latter can be used to maintain the outlet or inlet pressure of a gas constant within the regulating line, regardless of the influence of disturbance variables such as pressure changes and/or discharge changes. In addition, when combined with an appropriate pilot, the actuator assembly can be used to implement an active-monitor regulator configuration. As a gas pressure regulator, it can also be used at transfer stations used in gas transportation networks, as well as in power plants and industrial facilities. The HON 5020 actuator assembly unit can be used with natural gas or dry, non-aggressive industrial gases.

Note: The utilization limits of the device with regard to the medium, operating pressure and operating temperature can be gathered from the type plate attached on the device or the technical specifications.

The use under different operating conditions must be coordinated in consultation with the manufacturer.

Limitations of use

Please observe the following limitations of use:

- Do not use the device for any media other than those mentioned in the intended use or those discussed with and approved by the manufacturer.
- Do not use the device in any installation position other than the one documented in this component documentation.
- Do not use the device against the direction of flow specified on the device and in the component documentation.
- When replacing defective parts, only use original spare parts or manufacturer-approved standard parts.
- Do not attempt to modify or remodel the device on your own.

2.2 Labels/Markings

Illegible labels

⚠WARNING

Illegible information on the device poses a risk of injury due to resulting erroneous operation, use, or installation.

Labels, as well as inscriptions and stamping on the device, can eventually become soiled or otherwise unrecognizable to such an extent that users will not be warned effectively of hazards and may be unable to follow required operating instructions. This will pose a risk of injury.

⇨ Make sure to always keep all relevant labels in good condition so that they will be easily legible.

⇨ Immediately replace damaged and missing labels.

Labels on the HON 5020 actuator assembly

The following labels/markings can be found on the actuator assembly's casing:

Figure	No.	Meaning
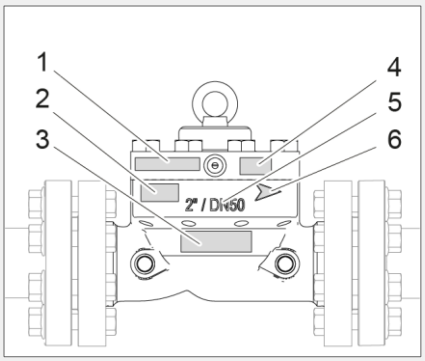	1	Nameplate
	2	Body part number
	3	▪ Batch number ▪ Foundry code
	4	CE PIN (only if the unit has been granted a CE type approval)
	5	Body nominal size
	6	Arrow indicating the direction of flow

Nameplate

For a detailed list of the information on the nameplate and what it means:

Identifying the device

Labels on connection lines

Small labels must be used to color-code and explicitly name the actuator assembly's connection lines based on what the lines are intended for and their minimum nominal size.

2.3 Identifying the actuator assembly

Identifying the actuator assembly

Make sure you have the right component documentation for your actuator assembly.

To identify your actuator assembly, look at the nameplate.

Verifying the technical specifications

Make sure that the conditions on site correlate with the information on the type plate and the technical specifications.

Technical specifications (see page 11)

Locating the type plate of the actuator assembly

The type plate of the actuator assembly can be found here:

Figure	No.	Meaning
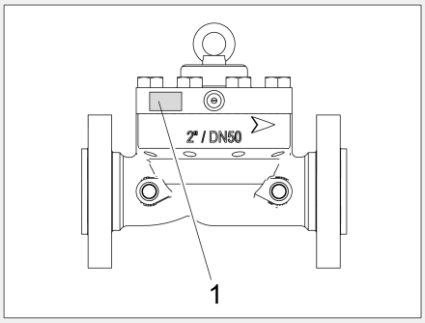	1	Front of the actuator assembly

Interpreting the type plate of the actuator assembly

For **actuator assembly models that use the metric system**, the information on the nameplate will be as follows:

Figure	No.	Meaning
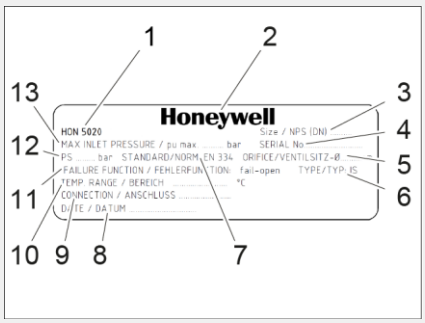	1	Model name
	2	Manufacturer
	3	Nominal size
	4	Serial number of the device
	5	Valve seat diameter
	6	Device version (IS = version with integral overpressure protection)
	7	Standard (EN 334)
	8	Manufacturing date (month/year)
	9	Connection
	10	Temperature range
	11	Failure function (fail-open)
	12	Maximum allowable pressure
	13	Maximum allowable inlet pressure

For **actuator assembly models that use the imperial system**, the information on the nameplate will be as follows:

Figure	No.	Meaning
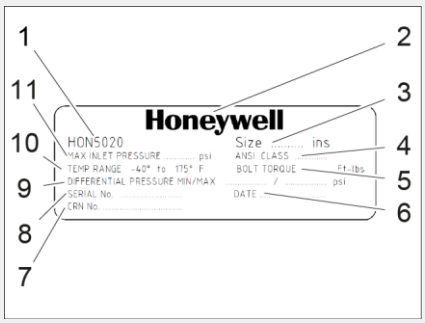	**1**	Model name
	2	Manufacturer
	3	Nominal size
	4	Nominal pressure / Flange standard
	5	Tightening torque
	6	Manufacturing date (month/year)
	7	Customer reference number
	8	Serial number
	9	Differential pressure
	10	Temperature range (-40° to 175° F)
	11	Maximum allowable inlet pressure

2.4 Layout and operation

How it works

In combination with an appropriate Honeywell pilot, the HON 5020 actuator assembly can be used as a gas pressure regulator in order to maintain the outlet or inlet pressure of a gas constant within the regulating line, regardless of the influence of disturbance variables such as pressure changes and/or discharge changes.

The pressure that needs to be regulated is fed to the pilot via the sensing line. The diaphragm system in the pilot determines the pressure actual value as a force on the measuring diaphragm and compares it with the force of the pilot spring, which is used as reference variable. If control deviations are detected based on the results from this comparison, the opening position of the actuator assembly's regulating diaphragm will be changed by adjusting the motorization pressure so that the pressure being regulated (actual value) will change to match the setpoint. When there is zero pressure flow, the device seals tightly.

Actuator assembly configuration

Actuator assembly configuration:

Figure	No.	Meaning
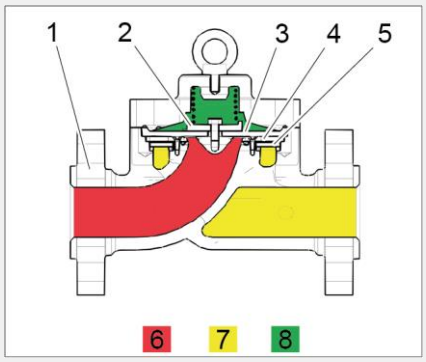	**1**	Actuator body
	2	Diaphragm assembly
	3	Flow restrictor
	4	Noise reduction element
	5	Support disc
	6	Inlet pressure
	7	Outlet pressure
	8	Motorization pressure

Actuator assembly connection lines

Actuator assembly connection lines:

Figure	No.	Connection
Front: 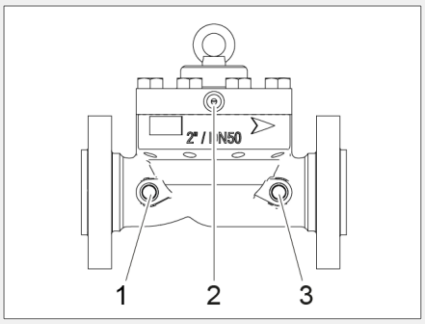	**1**	Inlet pressure
	2	Motorization pressure
	3	Outlet pressure / feedback
Back: 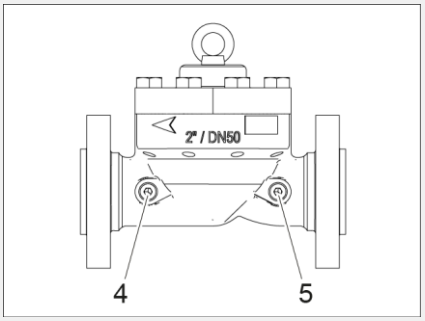	**4**	Outlet pressure
	5	Inlet pressure

The actuator assembly's connections have the following dimensions:

- **M 14 x 1.5** if the pilot being connected uses the metric system
- **3/8 NPT** if the pilot being connected uses the imperial system

Travel indication option

The numbers have the following meaning:

Figure	No.	Description
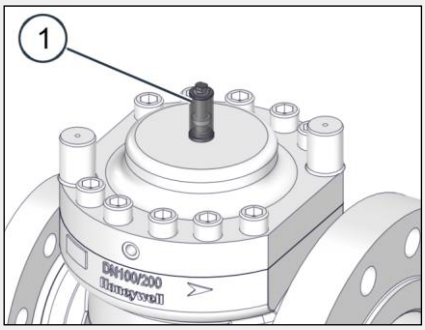	**1**	Optical travel indicator
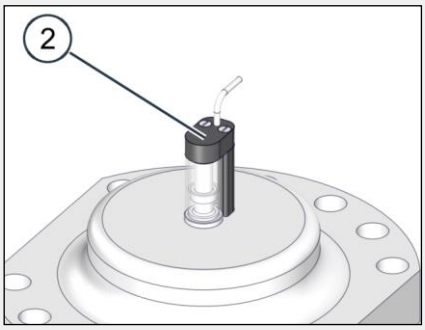	**2**	Optical travel indicator with remote control

How the travel indication option works

Optical travel indicator

- The regulator is in the closed position when the magnet is located completely behind the diffuse surface.
- When the travel position is in the open position, this is not a position indicator, but only shows that the regulator is in operation.

Optical travel indicator with remote control

- The optical travel indication can also be equipped with a remote indication.
- The positions open and closed are switched by means of a reed contact.
- The remote indication is also not a position indicator, but only shows whether or not the regulator is in operation.

2.5 Technical specifications

Nominal pressure rating and flange facing standards

There are various flange facings for the nominal diameters of 1" (DN 25); 2" (DN 50); 3" (DN 80); 4" (DN 100), and 6" (DN 150), as specified in the following standards:

- **ASME B16.5**
  Pressure rating as per Class 150; 300; 600 / Class 150 = 20 bar; Class 300 = 51 bar; Class 600 = 102 bar
  Flange facing: Raised face; ring joint
- **DIN EN 1759-1**
  Pressure rating as per Class 150; 300; 600 / Class 150 = 20 bar; Class 300 = 51 bar; Class 600 = 102 bar
  Flange facing: B flange; J flange
- **DIN EN 1092-1**
  Pressure rating as per PN 16; 25; 40 / PN 16 = 16 bar; PN 25 = 25 bar; PN 40 = 40 bar
  Flange facing: B flange

HON 5020 dimensions and weights when using HON 640a pilot as an example

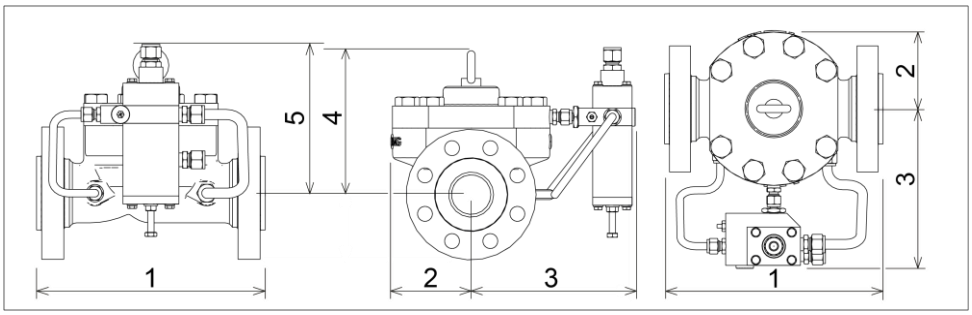

Size	PN	Class	1 inch (mm)	2 inch (mm)	3 inch (mm)	4 inch (mm)	5 inch (mm)	Weight* lbs (kg)
1″ (DN 25)	16	150	7.24 (184)	2.83 (72)	5.95 (151)	6.46 (164)	6.54 (166)	29.8 (13.7)
1″ (DN 25)	25 / 40	300	7.76 (197)	2.83 (72)	6.93 (176)	6.46 (164)	6.54 (166)	32.8 (14.9)
1″ (DN 25)		600	8.27 (210)	2.83 (72)	6.93 (176)	6.46 (164)	6.54 (166)	33.6 (15.4)
2″ (DN 50)	16	150	10.00 (254)	3.23 (82)	7.32 (186)	7.17 (182)	7.32 (186)	47.6 (21.6)
2″ (DN 50)	25 / 40	300	10.51 (267)	3.23 (82)	7.32 (186)	7.17 (182)	7.32 (186)	52.9 (24.0)
2″ (DN 50)		600	11.26 (286)	3.98 (101)	8.03 (204)	7.17 (182)	6.54 (166)	63.5 (28.8)
3″ (DN 80)	16	150	11.73 (298)	4.80 (122)	8.58 (218)	8.70 (221)	7.80 (198)	95.7 (43.4)

Size	PN	Class	1 inch (mm)	2 inch (mm)	3 inch (mm)	4 inch (mm)	5 inch (mm)	Weight* lbs (kg)
3″ (DN 80)	25 / 40	300	12.48 (317)	4.80 (122)	9.06 (230)	8.70 (221)	7.80 (198)	105.8 (48.0)
3″ (DN 80)		600	13.27 (337)	5.00 (127)	9.06 (230)	8.70 (221)	7.80 (198)	148.6 (67.4)
4″ (DN 100)	16	150	13.86 (352)	5.71 (145)	9.84 (250)	10.04 (255)	8.98 (228)	151.0 (68.5)
4″ (DN 100)	25 / 40	300	14.49 (368)	5.71 (145)	9.84 (250)	10.04 (255)	8.98 (228)	170.0 (77.1)
4″ (DN 100)		600	15.51 (394)	5.71 (145)	9.84 (250)	10.04 (255)	8.98 (228)	205.0 (93.0)
6″ (DN 150)	16	150	17.76 (451)	7.56 (192)	11.61 (295)	11.85 (301)	10.59 (269)	286.6 (130.0)
6″ (DN 150)	25 / 40	300	18.62 (473)	7.56 (192)	11.97 (304)	11.69 (297)	10.59 (269)	324.1 (147.0)
6″ (DN 150)		600	20.00 (508)	7.91 (201)	11.97 (304)	11.89 (302)	10.59 (269)	425.5 (193.0)

*The HON 640a pilot used in this example weighs: 4.19 lbs (1.9 kg)

Dimensions and weights for a HON 5020 body with expander as example

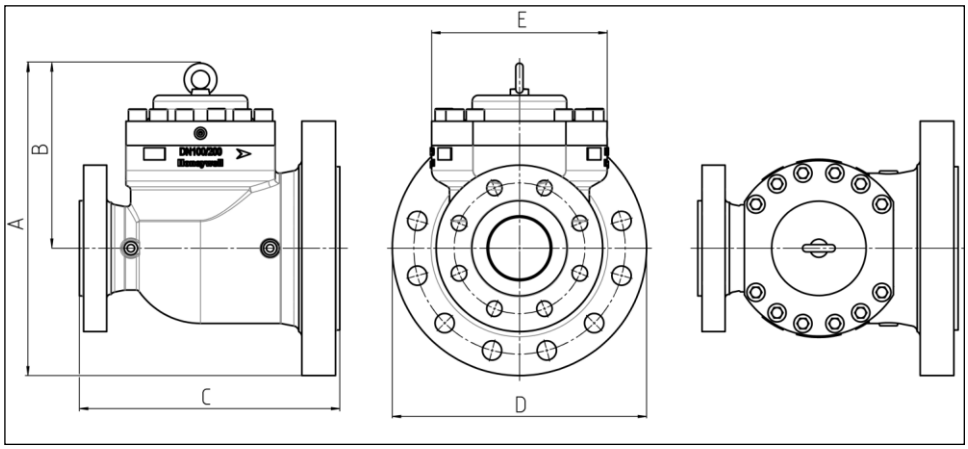

Size	PN	Class	A inches (mm)	B inches (mm)	C inches (mm)	D inches (mm)	E inches (mm)	Weight* lbs (kg)
1''-2"	16 / 25 / 40		247	164	240	165	144	31.5 (14.3) 33.7 (15.3) 33.7 (15.3)
1''-2"		150	239			150		31.1 (14.1)
1''-2"		300	247			165		33.7 (15.3)
1''-2"		600	247			165		36.6 (16.6)

Size	PN	Class	A inches (mm)	B inches (mm)	C inches (mm)	D inches (mm)	E inches (mm)	Weight* lbs (kg)
2"-4"	16		292			220		52.9 (24)
2"-4"	25 / 40		300			235		59.5 (27) 59.5 (27)
2"-4"		150	297	182	310	230	164	56.2 (25.5)
2"-4"		300	310			255		67.3 (30.5)
2"-4"		600	320			275	205	88.2 (40)
3"-6"	16		377			285		122.6 (55.6)
3"-6"	25 / 40		384			300		134.1 (60.8)
3"-6"		150	374	234	400	280	254	121.7 (55.2)
3"-6"		300	394			320		144.9 (65.7)
3"-6"		600	412			355		211.2 (95.8)
4"-8"	16		536			460		225.1 (102.1)
4"-8"	25		549			485		246.5 (111.8)
4"-8"	40		564			515		253.4 (114.9)
4"-8"		150	549	306	430	485	294	228.0 (103.4)
4"-8"		300	566			520		256.7 (116.4)
4"-8"		600	586			560		310.0 (140.6)
6"-12"	16		611			460		402.0 (182.3)
6"-12"	25		624			485		454.0 (205.9)
6"-12"	40		639	381		515	385	481.1 (218.2)
6"-12"		150	624		570	485		423.6 (192.1)
6"-12"		300	641			520		479.1 (217.3)
6"-12"		600	657	377		560	403	703.0 (318.8)

Operating pressure, Class 150

Criterion	Value
Nominal diameter	1″ (DN 25), 2″ (DN 50), 3″ (DN 80), 4″ (DN 100), 6″ (DN 150)
Maximum operating pressure	285 psi (19.65 bar)

Operating pressure, Class 300

Criterion	Value
Nominal diameter	1″ (DN 25), 2″ (DN 50), 3″ (DN 80), 4″ (DN 100), 6″ (DN 150)
Maximum operating pressure	740 psi (51 bar)

Operating pressure, Class 600

Criterion	Value
Nominal diameter	1″ (DN 25), 2″ (DN 50), 3″ (DN 80), 4″ (DN 100), 6″ (DN 150)
Maximum operating pressure	1480 psi (102 bar)

Operating pressure, PN 16

Criterion	Value
Nominal diameter	1″ (DN 25), 2″ (DN 50), 3″ (DN 80), 4″ (DN 100), 6″ (DN 150)
Maximum operating pressure	232 psi (16 bar)

Operating pressure, PN 25

Criterion	Value
Nominal diameter	1″ (DN 25), 2″ (DN 50), 3″ (DN 80), 4″ (DN 100), 6″ (DN 150)
Maximum operating pressure	362 psi (25 bar)

Operating pressure, PN 40

Criterion	Value
Nominal diameter	1″ (DN 25), 2″ (DN 50), 3″ (DN 80), 4″ (DN 100), 6″ (DN 150)
Maximum operating pressure	580 psi (40 bar)

Environmental conditions

Criterion	Value
Maximum temperature range	-40 °F – +175 °F (-40 °C – +79 °C)

ATEX specifications

The mechanical components of the device do not have any potential ignition sources. Consequently, they are not subject to the requirements of the ATEX 95 Equipment Directive (94/9/EU).

3 Safety

Contents

Topic	Page
Basic safety rules	15
Requirements concerning the workforce, personal protective gear, workplaces	16

3.1 Basic safety rules

Target group of these rules

These rules are intended for any individuals handling the device.

Purpose of these rules

These rules are designed to make sure that any individuals working with or on the device will thoroughly familiarize themselves with the corresponding hazards and safety measures and will observe the safety notices contained in this component documentation and on the device. If you do not follow these rules, there is a risk of injury including death and material damages.

How to use this component documentation

Observe the following rules:

- Read the chapter entitled Safety and the chapters relating to your responsibilities in their entirety. It is vital that you have understood these contents.
- Always keep this component documentation in the vicinity of the device so that you can consult it when necessary.
- Include this component documentation if you are transferring ownership of the device.

Handling the device

Observe the following rules:

- Only individuals who meet the requirements set forth in this component documentation have permission to work with/on the device.
- The device's intended use includes its use in hazardous locations. All work with and on the device must be carried out only after the presence of an explosive atmosphere has been fully ruled out.
- Only use the device for the intended purpose. Never use the device for any other, potentially logical purposes.
- Follow all the safety measures outlined in this component documentation and on the device. In particular, wear the mandatory personal protective gear.
- Do not modify the device in any way, e. g. by removing parts or adding unapproved parts. In particular, you have no permission to modify or disable any safety contrivances.
- When replacing defective parts, only use original spare parts or manufacturer-approved standard parts.

Requirements concerning the workforce

Personnel must meet the following requirements:

- All personnel must meet the requirements corresponding to their duties.
- All personnel must read and understand this component documentation before working with/on the device.
- All occupational health and safety regulations that apply in your country must be complied with.
- All personnel must be provided with the personal protective equipment required for their work. This personal protective equipment must be in good condition at all times.
- All personnel must wear the personal protective equipment required for their work.

Conduct in the event of accidents

The device is designed and built such that the employees can work with it without being at risk. In spite of all the precautions, accidents can happen under unfavorable circumstances. Always consult the directives of your company concerning the protection of the workforce.

3.2 Requirements concerning the workforce, personal protective gear, workplaces

Requirements concerning the workforce

Individuals tasked with handling the device must meet the following requirements:

Personnel	Responsibilities	Required qualification
Skilled person or expert	Any work on and with the device	▪ Professional training and experience operating pressure equipment and systems ▪ Knowledge of the relevant standards and regulations ▪ Ability to identify and avoid dangers autonomously
Certified, independent competent person	Safety checks	▪ Professional training ▪ Knowledge of the relevant standards and regulations ▪ Ability to identify and avoid dangers autonomously
Carrier	Company-to-company transport	▪ Professional training and experience transporting pressure equipment and systems ▪ Knowledge of the relevant standards and regulations ▪ Ability to identify and avoid dangers autonomously ▪ Knowledge with securing hauling distances ▪ Knowledge with the use of hoisting equipment
Transportation personnel	Intra-company transport	Professional training and experience with the transport using stackers, etc.
Mechanical fitter	Mechanical installation	▪ Professional training and experience operating pressure equipment and systems ▪ Knowledge of the relevant standards and regulations ▪ Ability to identify and avoid dangers autonomously

Personnel	Responsibilities	Required qualification
Tasked with the commissioning	▪ Initial start-up ▪ Renewed start-up	▪ Professional training and experience operating pressure equipment and systems ▪ Knowledge of the relevant standards and regulations ▪ Ability to identify and avoid dangers autonomously
Tasked with the installation	Set-up	▪ Professional training and experience operating pressure equipment and systems ▪ Knowledge of the relevant standards and regulations ▪ Ability to identify and avoid dangers autonomously
Mechanical maintenance personnel	Involving mechanical parts: ▪ Fault finding ▪ Maintenance ▪ Repairs	▪ Professional training and experience operating pressure equipment and systems ▪ Knowledge of the relevant standards and regulations ▪ Ability to identify and avoid dangers autonomously
Inspector	Safety check	Qualified inspector with adequate knowledge of gas pressure regulators
Tasked with the disposal	Disposal of the device	▪ Professional training and experience with the disposal of pressure equipment and systems ▪ Knowledge of the relevant standards and regulations ▪ Ability to identify and avoid dangers autonomously

Requirements for the personal protective gear

Any persons handling the device must be equipped with the following personal protective gear:

Task	Required personal protective gear
Start-up, operation (including partial), cleaning, maintenance, search and remedy of errors	▪ Industrial protective helmet ▪ Protective clothing ▪ Safety harness ▪ Ear protection ▪ Safety boots with protection for electrostatic discharge (ESD) ▪ Safety goggles ▪ Safety gloves

Workplace requirements

To ensure the safe handling of the device, the personnel must remain at the workplaces intended for performing their tasks.

The workplaces for performing the various tasks are at the following locations:

Task	Workplaces
▪ Installation ▪ Start-up ▪ Set-up ▪ Maintenance, repairs ▪ Decommissioning	All around the device, depending on the task

4 Transport and installation

Contents

Topic	Page
Transporting the actuator assembly	19
Mounting the actuator assembly	21
Checking the system for leaks	22

4.1 Transporting the actuator assembly

Heavy transport units

⚠WARNING

Risk of serious injury posed by heavy loads when using cranes for transportation

Transporting heavy devices or components with a crane may result in serious impact and crush injuries if the loads start moving in an uncontrolled manner.

⇨ Loads may only be transported with a crane by a duly qualified person.
⇨ Markings and information about the center of gravity of the load (if applicable) must be observed.
⇨ Loads may only be moved under supervision.

Suspended loads

⚠WARNING

Risk of serious injury in the event that load handling attachments break while holding a suspended load

Heavy loads picked up or transported with hoisting and slinging gear may result in serious impact and crush injuries if the load handling attachments fail.

⇨ Only fasten the device at the positions intended for the transport.
⇨ The load-bearing capacity of the appropriate hoisting equipment must correspond at least to the weight of the load to be transported.
⇨ Always stand clear of suspended loads.
⇨ Ensure that no person is within the danger zone.

Selecting the hoisting equipment and slings

A mobile workshop crane is suitable for use as hoisting equipment.

The following are adequate for use as slings:

- Ropes
- Belts
- Chains

The hoisting equipment and slings must meet the following criteria:

- The load-bearing capacity is adequate for the weight of the HON 5020.
- The hoisting height is adequate for the mounting position at the installation site.

Transporting the actuator assembly

Proceed as follows:

Figure	Step	Description
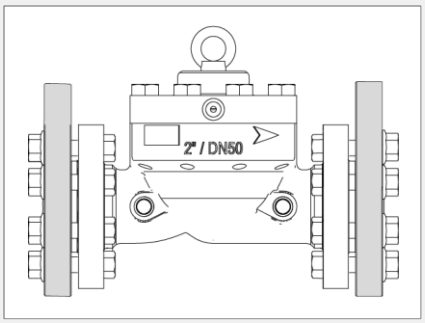	**1**	Leave the flange protective plates on the HON 5020 during transport.
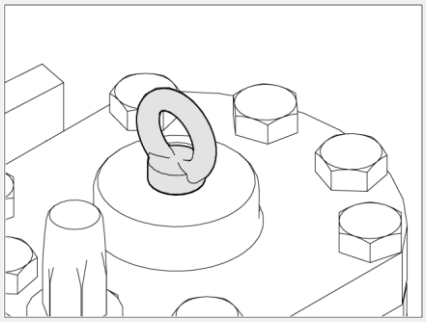	**2**	Hook the sling into the eye bolt.
	3	Lift the HON 5020. Slowly and carefully transport the HON 5020 to the location where it will be installed.
If the travel indication option is present, proceed as follows:		
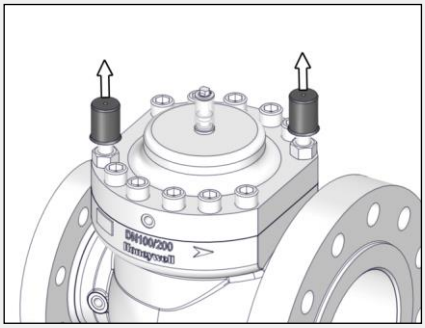	**1**	Remove the protective caps.
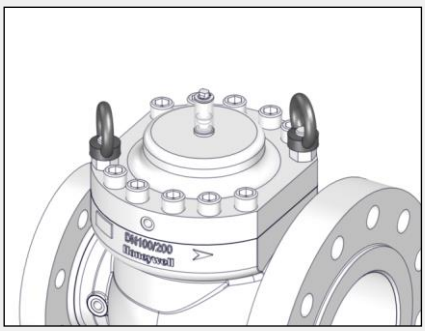	**2**	Install the ring bolts included in delivery and attach the slings to the ring bolts.
	3	Lift the HON 5020. Slowly and carefully transport the HON 5020 to the location where it will be installed.

4.2 Mounting the actuator assembly

Preparing the materials

Prepare the following materials:

- Flange gaskets
- Threaded bolts
- Washers
- Nuts

The quantity and size are dependent on the following criteria:

- Design and size of the flange

Assessing the situation

Assess the installation situation.

The numbers have the following meaning:

Figure	No.	Meaning
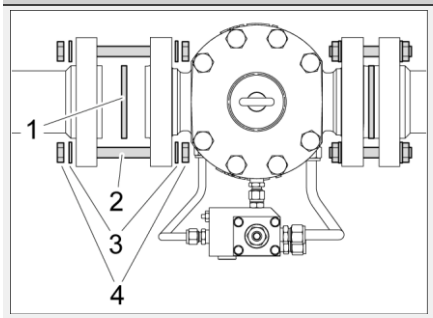	**1**	Flange gasket
	2	Threaded bolts
	3	Washer
	4	Nut

Mounting the actuator assembly

Proceed as follows:

Figure	Step	Description
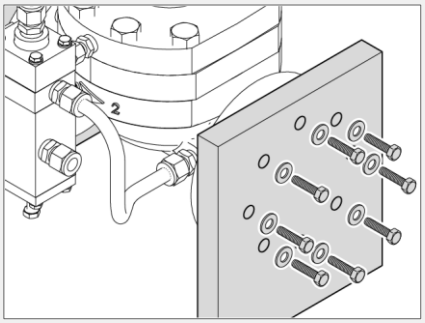	**1**	Remove the protective plates from the flange.
	2	Transport the device to the location where it will be installed. ▪ The device needs to be installed in the piping in a horizontal and level position. If you want to use a different installation position, consult with the manufacturer first. ▪ Pay attention to the direction of flow for the gaseous fluid as marked on the body.
	3	Secure and support the device's position in such a way that the device can be installed in the piping without any stress and that the piping's weight will be supported as well.
	4	Install the flange gaskets.
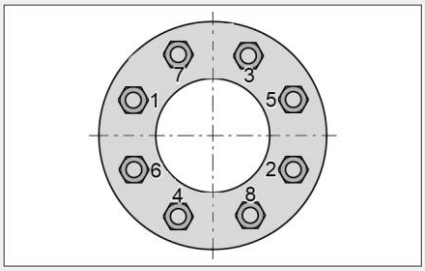	**5**	Screw down the flange crosswise in the specified order. When doing so, make sure to observe the torques specified by the flange gaskets' manufacturer.

Final inspection

Conduct a final inspection to check whether the following criteria are met:

- All screwed connections on the device and supply lines are securely fastened.

If …	then …
at least one criterion is not met	you should correct the error before proceeding with the next task.
all criteria are met	you may proceed with the next task.

4.3 Checking the system for leaks

Leak test conducted by the manufacturer

Prior to delivery, the manufacturer conducted a pressure and leak test on the gas pressure regulator as specified in DIN EN 334.

Leak test at the set-up location (in Germany)

The gas pressure regulator installed in the system must be subjected to a leak test at the setup location as follows:

Normative basis	DVGW Worksheet G 491
Test method	Bubble test method
Test medium	Air or inert gas
Scope of the test	All detachable pipe joints
Test equipment	Foam-generating leakage medium
Test pressure	1.1 times the operating pressure (MOP)

Leak test at the set-up location (in other countries)

The device installed into the system must undergo a leak test at the set-up location in accordance with applicable international and national standards.

Pressurized parts

⚠WARNING

Risk of serious injury posed by pressurized components moving in an uncontrolled manner when handled improperly.

If not handled properly or in the event of a defect, gas can escape from pressurized components under high pressure and cause serious injuries and even death. Before you start working on these components:

⇨ Close all connections leading to the gas-carrying line.

⇨ Establish a depressurized status. Residual amounts of energy must be depressurized as well.

Pressurized parts

⚠WARNING

Risk of injury posed by bursting parts in the event that they are subjected to pressure in the wrong direction

The device has been designed for a specific direction of flow, which is labeled on the device. Subjecting the device to pressure in the wrong direction may result in serious injury caused by bursting parts.

⇨ Pressurize the system only on the inlet side.

Details about the operating pressure can be found in the technical specifications.

Technical specifications (see page 11)

Test configuration

The test setup is as follows (schematic diagram, using the imperial system HON 640a as an example):

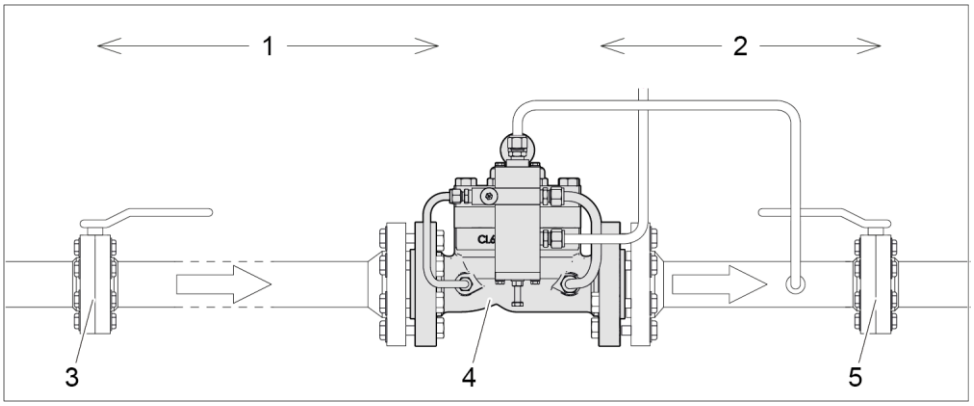

The numbers have the following meaning:

No.	Meaning
1	Inlet area
2	Outlet area
3	Inlet stop valve armature
4	Gas pressure regulator
5	Outlet stop valve armature

Checking the system for leaks

Proceed as follows:

Step	Description
1	Slowly close the outlet stop valve armature.
2	Apply the test medium to all detachable pipe joints.
3	Observe the test medium on all detachable pipe joints for several minutes.

If ...	then ...
no foam or bubbles are formed	▪ the system is leak-proof. ▪ the system may be put into operation.
foam or bubbles are formed	▪ the affected pipe joint is leaking. ▪ the system may **not** be put into operation. ▪ Proceed with step 4.

Step	Description
4	Slowly close the inlet stop valve armature.
5	Depressurize the inlet area and the outlet area.
6	Seal the leaking pipe joints.
7	Repeat the leak test starting with step 1.

5 Maintenance

Contents

Topic	Page
Maintenance schedule	24
Preparing the tools, spare parts and lubricants	24
Preparing for the maintenance	25
Maintaining the actuator assembly	26

5.1 Maintenance schedule

Meaning

Since the maintenance intervals are highly dependent on the operating conditions and the gas quality, it is impossible to provide set maintenance intervals.

It is recommended to use maintenance intervals conforming to the specifications in DVGW Code of Practice G 495. In addition, the need for maintenance must be determined and documented on the basis of operational requirements and experience.

Maintenance must be carried out in compliance with all federal and state laws and regulations, as well as with the local rules and regulations set forth by the relevant utilities and authorities and any other applicable regulations.

Maintenance schedule

Perform the following maintenance and repairs within the specified time intervals:

Task	See section	Interval			
		as needed	every 3 months	every year	every 5 years
Maintaining the actuator assembly	*Maintaining the actuator assembly* (see page 26)			●	

5.2 Preparing the tools, spare parts and lubricants

Special tools

If special tools are required, the appropriate details will be provided at the beginning of the respective chapter.

Spare parts categories

Spare parts fall into the following categories:

Spare parts category	Definition
Maintenance part	Spare parts that always have to be replaced during maintenance.
Servicing parts	Spare parts that need to be checked during maintenance and that must be replaced if necessary due to their condition.
	Spare parts that qualified personnel employed by the company operating the device is allowed to replace in order to convert the device (e.g., when changing the pressure range).
	Spare parts that qualified personnel employed by the company operating the device is allowed to replace in the event of a fault or defect.

Maintenance and servicing parts for actuator assembly

- The spare parts always required for the actuator assembly's maintenance are grouped together into spare parts kits appropriate for the device in question. Each spare parts kit has its own part number.
- Individual servicing parts can be ordered by using the corresponding part number, which is specified in the bill of materials for the actuator assembly. The required number of parts is specified in the "Quantity" column.

Maintenance and servicing parts for travel indication (optional)

- The bill of materials for the travel indication is broken down into maintenance parts and servicing parts.
- The required number of maintenance or servicing parts is indicated under the relevant part number in the "Part No." column. If no quantity is specified, this means that only one unit is required.

Lubricants

The specifications for the lubricants can be found in the list of lubricants.

The list of lubricants can be found in the appendix of this component documentation.

5.3 Preparing for the maintenance

Pressurized parts

⚠WARNING

Risk of serious injury posed by pressurized components moving in an uncontrolled manner when handled improperly.

If not handled properly or in the event of a defect, gas can escape from pressurized components under high pressure and cause serious injuries and even death. Before you start working on these components:

⇨ Close all connections leading to the gas-carrying line.

⇨ Establish a depressurized status. Residual amounts of energy must be depressurized as well.

Overview

Schematic diagram using the imperial system HON 640a as an example:

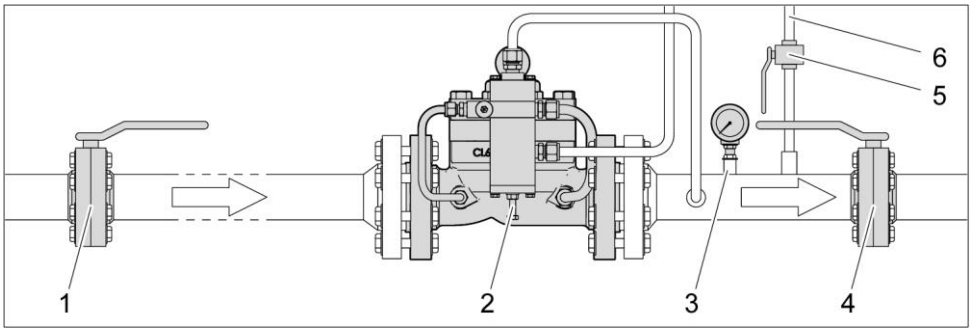

The numbers have the following meaning:

No.	Meaning
1	Inlet stop valve armature
2	Gas pressure regulator
3	Pressure gauge
4	Outlet stop valve armature
5	Valve for blowdown line
6	Blowdown line

Establishing the depressurized status

Proceed as follows:

Step	Description
1	Close the outlet stop valve armature (4).
2	Close the inlet stop valve armature (1).
3	Depressurize the pilot. The following applies to most pilots: Turn the set screw on the pilot clockwise until the pressure in the regulator is equalized.
4	Open the valve (5) in the blowdown line (6) to discharge the pressure between the inlet and the outlet valves.

Protecting the pipe connections from being twisted

When conducting work involving the pipework, please always observe the following:

Figure	Description
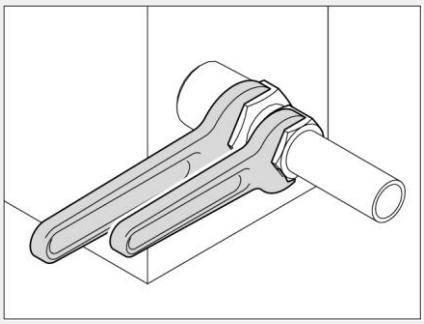	Do not twist the pipe connections in the assemblies. Use a second spanner wrench for securing when loosening and tightening pipe joints.

5.4 Maintaining the actuator assembly

Requirements

Make sure that the following requirements are met:

- The system is depressurized; see *Preparing for maintenance* (see page 25).
  WARNING! Mortal danger associated with pressurized components.

Tightening torques

When screwing the actuator assembly's lid, make sure to observe the following tightening torques:

Nominal size	Pressure rating	Screw specifications	Tightening torque
1″ (DN 25)	Class 150/300/600 PN 16/25/40	5/8″ UNC grade 7 M16	203 Nm (150 ft lbs)
2″ (DN 50)	Class 150/300/600 PN 16/25/40	5/8″ UNC grade 7 M16	203 Nm (150 ft lbs)
3″ (DN 80)	Class 150 PN 16	5/8″ UNC grade 7 M16	203 Nm (150 ft lbs)
3″ (DN 80)	Class 300/600 PN 25/40	3/4″ UNC grade 7 M20	353 Nm (260 ft lbs)
4″ (DN 100)	Class 150 PN 16	5/8″ UNC grade 7 M16	203 Nm (150 ft lbs)
4″ (DN 100)	Class 300/600 PN 25/40	3/4″ UNC grade 7 M20	353 Nm (260 ft lbs)
6″ (DN 150)	Class 150 PN 16	5/8″ UNC grade 7 M16	203 Nm (150 ft lbs)
6″ (DN 150)	Class 300 PN 25/40	3/4″ UNC grade 7 M20	353 Nm (260 ft lbs)

Nominal size	Pressure rating	Screw specifications	Tightening torque
6″ (DN 150)	Class 600	1″ UNC grade 7 M24	705 Nm (520 ft lbs)

Spare parts

Prepare the following spare parts:

- Flow restrictor (if necessary)
- Diaphragm
- O-ring

Maintaining the actuator assembly

Proceed as follows:

Figure	Step	Description
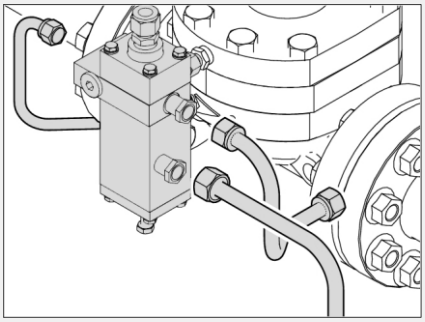	**1**	Remove the pilot, together with all the corresponding connecting pipes, from the actuator assembly.
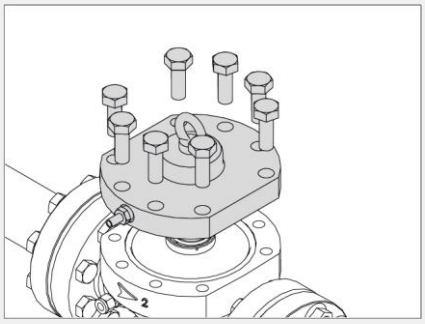	**2**	Disassemble the lid. **CAUTION!** The lid is spring-loaded. Risk of injury due to bouncing up when the screws are unscrewed. Push the lid down when unscrewing the screws.
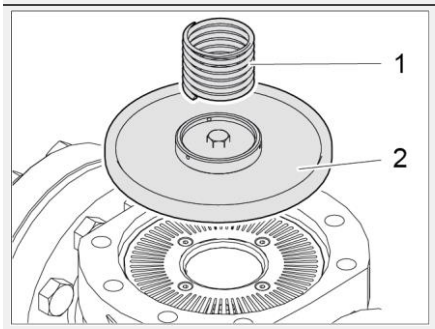	**3**	Remove the closing spring (1) and the diaphragm unit (2).
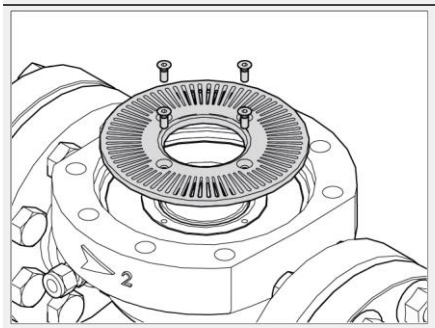	**4**	Remove the flow restrictor. If the flow restrictor is damaged: Replace the flow restrictor with a new one.

Figure	Step	Description
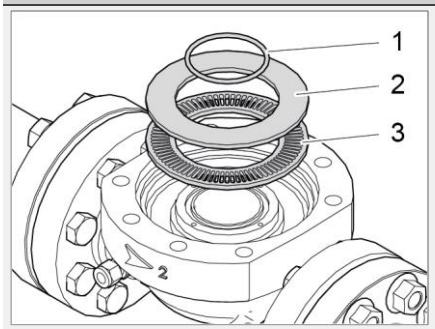	**5**	Remove the O-ring (1), the noise reduction element (2), and the support disc (3). Replace the O-ring with a new, lubricated O-ring. Check the noise reduction element and the support disc for damage and replace them if necessary.
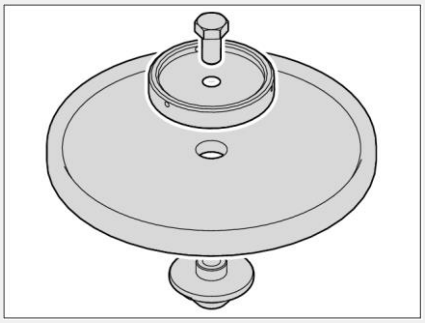	**6**	If the diaphragm is damaged: Dismantle the diaphragm unit. Replace the diaphragm with a new diaphragm.
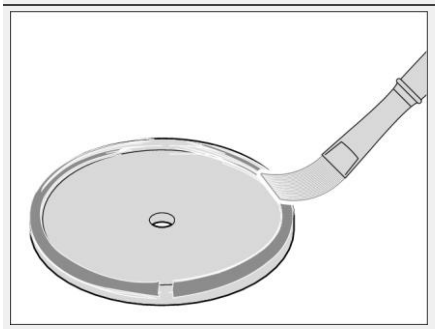	**7**	Lightly grease the inside and outside edge of the new diaphragm.
	8	Re-assemble the diaphragm unit.
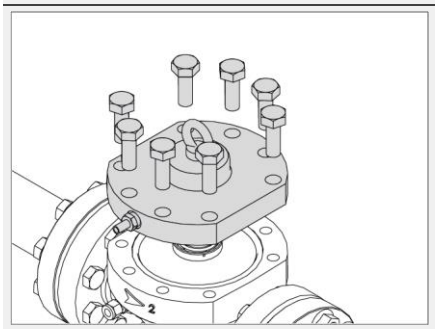	**9**	Re-assemble the actuator assembly. Push the lid down when screwing down the screws until they are completely secured. Refer to the additional tightening torque information at the beginning of this topic. Tighten the lid's screws in a criss-cross sequence.
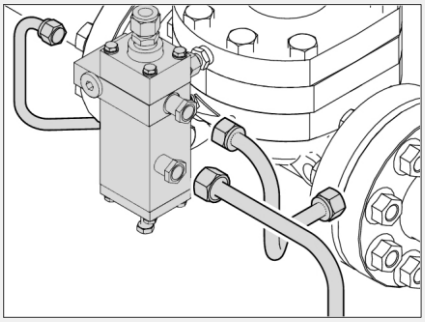	**10**	Reinstall the pilot together with all the corresponding connecting pipes.

6 Storage, removal, and disposal

Contents

Topic	Page
Storing the device	29
Disassembling the device	29
Disposing of the device	31

6.1 Storing the device

Storage of the packing units

Observe the following rules:

- Do not store the device outdoors.
- Store the device in a dry and dust-free environment on a flat surface.
- Do not expose the device to any aggressive media, ozone or ionizing radiation or to direct heat sources.
- Storage conditions:
  - Temperature: 32 °F to 77 °F (0 °C to 25 °C)
  - Relative humidity: < 55 %.
- Avoid mechanical vibrations.
- Storage periods:
  - When storing the device for up to one year:
    Store the device in its original packaging and in the same condition it was delivered. All protective caps of the device must remain in place.
  - When storing the device for more than one year (e.g., as a backup device):
    Store the device in its original packaging and in the same condition it was delivered and check it annually for damage and soiling. Consider the storage period in the maintenance cycles.

Note: Please also observe any storage information provided on the packaging.

Storage of spare parts

The following rules apply to the storage of spare parts:

- Apply an appropriate protective agent to assemblies at risk of corrosion.
- If stored correctly, O-rings and gaskets should not be kept longer than 7 years.
- Store the spare parts in the original package until they are used.

6.2 Disassembling the device

Pressurized parts

⚠WARNING

Risk of serious injury posed by pressurized components moving in an uncontrolled manner when handled improperly.

If not handled properly or in the event of a defect, gas can escape from pressurized components under high pressure and cause serious injuries and even death. Before you start working on these components:

⇨ Close all connections leading to the gas-carrying line.

⇨ Establish a depressurized status. Residual amounts of energy must be depressurized as well.

Overview

Schematic diagram using the imperial system HON 640a as an example:

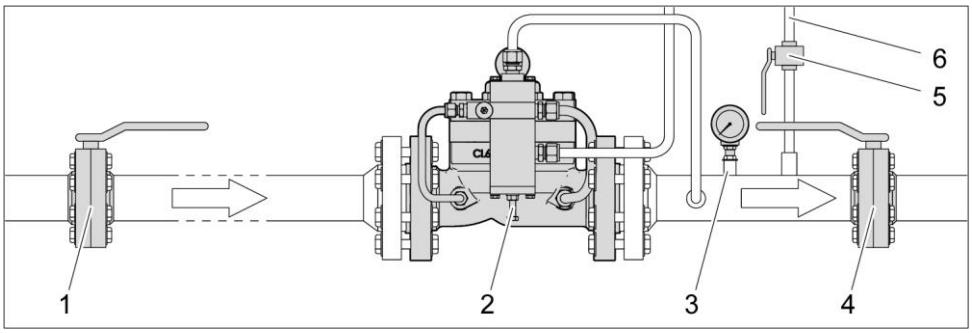

The numbers have the following meaning:

No.	Meaning
1	Inlet stop valve armature
2	Gas pressure regulator
3	Pressure gauge
4	Outlet stop valve armature
5	Valve for blowdown line
6	Blowdown line

Establishing the depressurized status

Proceed as follows:

Step	Description
1	Close the outlet stop valve armature (4).
2	Close the inlet stop valve armature (1).
3	Depressurize the pilot: Turn the set screw on the pilot clockwise until the pressure in the regulator is equalized.
4	Open the valve (5) in the blowdown line (6) to discharge the pressure between the inlet and the outlet valves.

Protecting the pipe connections from being twisted

When conducting work involving the pipework, please always observe the following:

Figure	Description
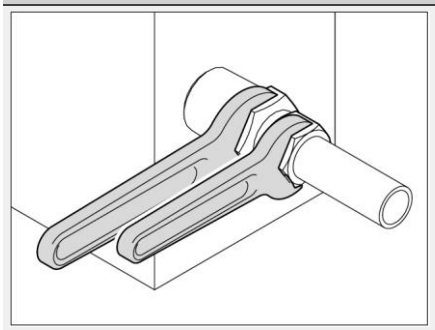	Do not twist the pipe connections in the assemblies. Use a second spanner wrench for securing when loosening and tightening pipe joints.

Purging the lines with nitrogen

All the gas pressure regulator's lines must be purged with nitrogen before the device is removed.

Disassembling the device

Proceed as follows:

Step	Description
1	Disassemble the device. Observe the information and instructions in the *Transport and installation* (see page 19) section when doing so.

6.3 Disposing of the device

Appropriate disposal

Comply with the legally stipulated disposal rules. Observe the following details pertaining to the appropriate disposal (not all of the items may be applicable to your device):

- Dispose of the metals according to their types and grades (steel scrap, cast iron scrap, light alloy scrap, nonferrous heavy metal scrap, synthetic rubber scrap, electronic scrap).
- Recycle elements made of synthetic materials.
- Dispose of any other components according to the quality of the materials.

7 Appendix

Contents

Topic	Page
Spare parts for the HON 5020 actuator assembly	32
Spare parts for travel indication option	36
Lubricants	36

7.1 Spare parts for the HON 5020 actuator assembly

Spare parts drawing for actuator assembly

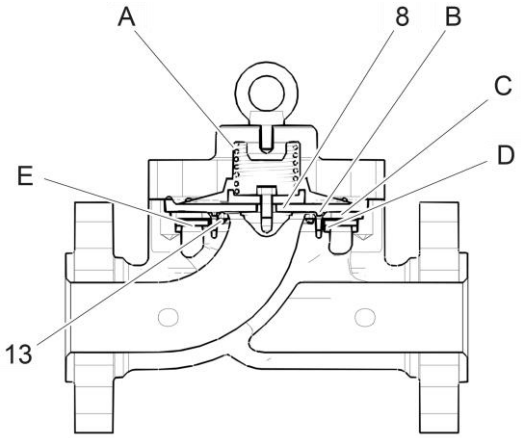

Maintenance and servicing parts for actuator assembly

Nominal size	No. / Letter	Qty	Name	Part no.
1″	8	1	Diaphragm, up to 50 bar DP	201/MJ/001
1″	8	1	Diaphragm, up to 70 bar DP	201/MJ/004
1″	13	1	O-ring	730ODVN224
1″	A	1	Closing spring	18358049
1″	B	4	Screws	710BCFE03010
1″	C	1		
			Flow restrictor, 100%	201/MZ/001
			Flow restrictor, 75%	201/MZ/004
			Flow restrictor, 50%	201/MZ/006
			Flow restrictor 25%	201/MZ/008
1″	D	1	Carrier plate	201/MN/001
1″	E	1	Metal foam	201/MF/001
2″	8	1	Diaphragm, up to 50 bar DP	202/MJ/012
2″	8	1	Diaphragm, up to 70 bar DP	202/MJ/013
2″	13	1	O-ring	730ODVN229
2″	A	1	Closing spring	SS1075
2″	B	4	Screws	710BCFE03010

2″	C	1		
			Flow restrictor, 100%	202/MZ/011
			Flow restrictor, 75%	202/MZ/019
			Flow restrictor, 50%	202/MZ/013
			Flow restrictor 25%	202/MZ/020
2″	D	1	Carrier plate	202/MN/001
2″	E	1	Metal foam	202/MF/001
3″	8	1	Diaphragm, up to 50 bar DP	203/MJ/013
3″	8	1	Diaphragm, up to 70 bar DP	203/MJ/014
3″	13	1	O-ring	730ODVN238
3″	A	1	Closing spring	SS1293
3″	B	6	Screws	710BCFE03010
3″	C	1		
			Flow restrictor, 100%	203/MZ/010
			Flow restrictor, 75%	203/MZ/018
			Flow restrictor, 50%	203/MZ/012
			Flow restrictor 25%	203/MZ/019
3″	D	1	Carrier plate	203/MN/001
3″	E	1	Metal foam	203/MF/001
4″	8	1	Diaphragm, up to 50 bar DP	204/MJ/003
4″	8	1	Diaphragm, up to 70 bar DP	204/MJ/004
4″	13	1	O-ring	730ODVN244
4″	A	1	Closing spring	10024055
4″	B	6	Screws	710BCFE03010
4″	C	1		
			Flow restrictor, 100%	204/MZ/010
			Flow restrictor, 75%	204/MZ/016
			Flow restrictor, 50%	204/MZ/012
			Flow restrictor 25%	204/MZ/017
4″	D	1	Carrier plate	204/MN/002
4″	E	1	Metal foam	204/MF/001
6″	8	1	Diaphragm 50/70 bar DP	10011307
6″	13	1	O-ring	730ODVN261
6″	A	1	Closing spring	10011249
6″	B	6	Screws	710BCFE03010

6″	C	1		
			Flow restrictor, 100%	206/MZ/002
			Flow restrictor, 75%	206/MZ/010
			Flow restrictor, 50%	206/MZ/006
			Flow restrictor 25%	206/MZ/011
6″	D	1	Carrier plate	206/MN/001
6″	E	1	Metal foam	206/MF/001

Spare part kits for the actuator assembly

Nominal size	No. / Letter	Qty	Name	Part no.
1″			1" Class 150/300, PN 16/25/40 series 5020 IGP spare parts kit	201/MS-001
	8	1	Diaphragm, up to 50 bar DP	201/MJ/001
	13	1	O-ring	730ODVN224

Nominal size	No. / Letter	Qty	Name	Part no.
1″			1" Class 600 5020 series IGP spare parts kit	201/MS-002
	8	1	Diaphragm, up to 70 bar DP	201/MJ/004
	13	1	O-ring	730ODVN224

Nominal size	No. / Letter	Qty	Name	Part no.
2″			2" Class 150/300, PN 16/25/40 series 5020 IGP spare parts kit	202/MS-008
	8	1	Diaphragm, up to 50 bar DP	202/MJ/012
	13	1	O-ring	730ODVN229

Nominal size	No. / Letter	Qty	Name	Part no.
2″			2" Class 600 5020 series IGP spare parts kit	202/MS-009
	8	1	Diaphragm, up to 70 bar DP	202/MJ/013
	13	1	O-ring	730ODVN229

Nominal size	No. / Letter	Qty	Name	Part no.
3″			3" Class 150/300, PN 16/25/40 series 5020 IGP spare parts kit	203/MS-006
	8	1	Diaphragm, up to 50 bar DP	203/MJ/013
	13	1	O-ring	730ODVN238

Nominal size	No. / Letter	Qty	Name	Part no.
3″			3" Class 600 5020 series IGP spare parts kit	203/MS-007
	8	1	Diaphragm, up to 70 bar DP	203/MJ/014
	13	1	O-ring	730ODVN238

Nominal size	No. / Letter	Qty	Name	Part no.
4″			4" Class 150/300, PN 16/25/40 series 5020 IGP spare parts kit	204/MS-008
	8	1	Diaphragm, up to 50 bar DP	204/MJ/003
	13	1	O-ring	730ODVN244

Nominal size	No. / Letter	Qty	Name	Part no.
4″			4" Class 600 5020 series IGP spare parts kit	204/MS-009
	8	1	Diaphragm, up to 70 bar DP	204/MJ/004
	13	1	O-ring	730ODVN244

Nominal size	No. / Letter	Qty	Name	Part no.
6″			6" Class 150/300/600, PN 16/25/40 series 5020 IGP spare parts kit	206/MS-001
	8	1	Diaphragm 50/70 bar DP	10011307
	13	1	O-ring	730ODVN261

7.2 Spare parts for travel indication option

Spare part drawings

Optical travel indicator

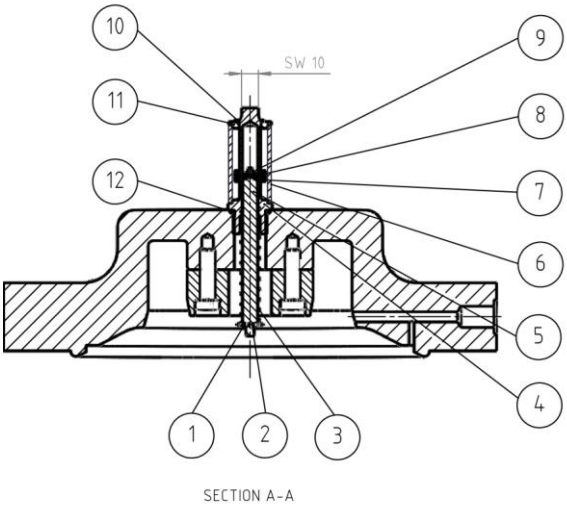

Optical travel indicator with remote control

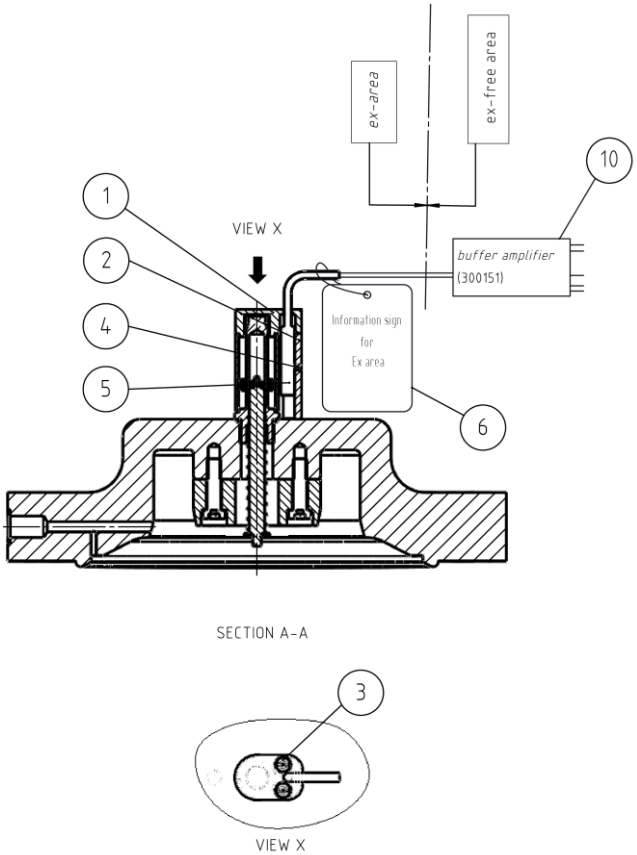

Maintenance and servicing parts

No.	Qty	Name	NBR Part no.	FKM Part no.
12	1	O-Ring	100448-RMK	20823

7.3 Lubricants

Lubricant table

Important! All parts must be slightly greased.

Use the following lubricants:

Components	Lubricant	Part no.
▪ O-rings ▪ Diaphragm grip body	Silicone grease	27 052
▪ All fastening screws ▪ All fittings	Assembly lubricant	27 091

Subject to change without notice

Scan these QR Codes to see how Honeywell's integrated gas solutions can help you to better manage your gas assets and optimize your value chain.

Additional information

To learn more about Honeywell's product contact your Honeywell Process Solutions representative, or visit www.honeywellprocess.com or www.hongastec.de.

Honeywell Process Solutions

1250 West Sam Houston Parkway South
Houston, TX 77042
Phone: 1-602-293-1866 Option 4

Honeywell Gas Technologies GmbH
Osterholzstrasse 45
23123 Kassel, Germany
Phone: +49 (0) 561 5007000

Emaar Business Park, Building 2, Sheikh Zayed Road, PO Box 232362
Dubai, United Arab Emirates
Phone: +97144505800

Honeywell Engineering Sdn Bhd
1st Floor, Block B, No.10
Jalan Bersaru 13/4
46200, Petailing Jaya Selangor DE, Malaysia
Phone: +603 7626 57000

A1 Building, C&W Industry Zone
No.14, Jiuxiangqiao Rd., Chaoyang District, Beijing, P.R. China 100015
Phone: +8610-56696001

www.honeywellprocess.com
www.hongastec.de

October 2020 – REV A